JOUCOMATIC

Pneumatic valve islands

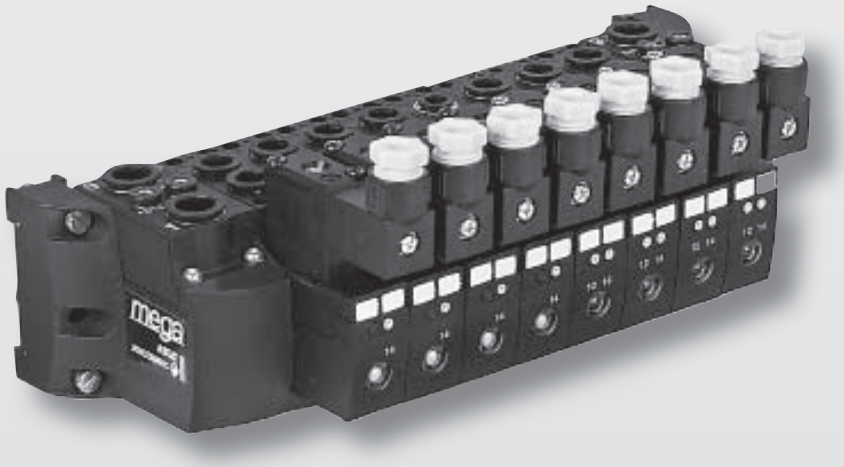

mega

The MEGA solenoid air operated spool valve

JOUCOMATIC offers a concept of solenoid air operated spool valves which can be fitted together to form islands. Due to its new patented design, the MEGA spool valve's major advantages are its reduced size, optimal performance and modular structure. It offers simple operation, as well as diagnostic analysis and maintenance features.

Monostable spool valve

Bistable spool valve
(with integral twin pilot)

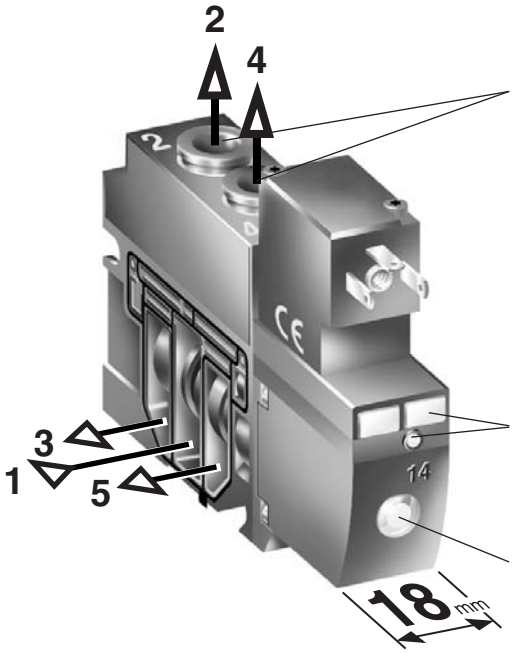

Reduced time for cabling
Outlets with instant fittings for flexible hose O.D 6 or 8 mm.

Small size
Integral twin pilot with low power coil (1.5 W)
Same size as monostable valve

Flexibility
Selector sealing for internal or external pilot pressure supply

Operating assistance
ID labels
Impulse-type or locking push/turn-type manual override

Visual indication
Indication of spool position

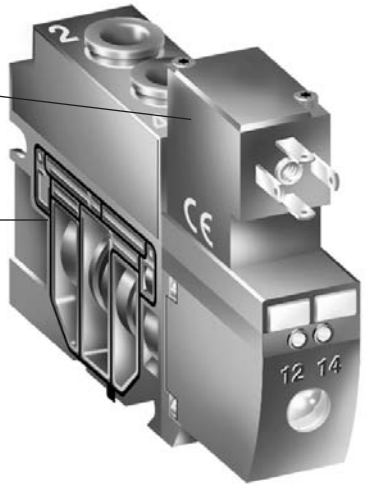

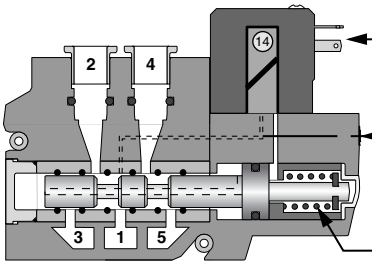

Flat terminals to DIN 46244
A2.8 x 0.5

Manual override (▼●)

Spring or differential return

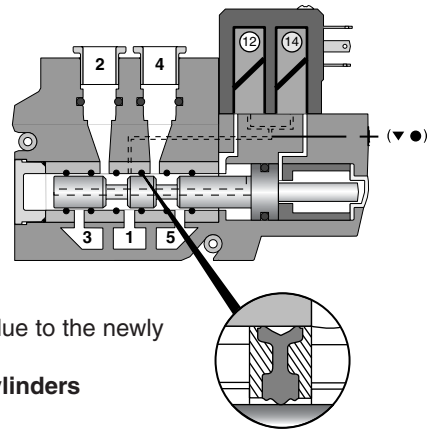

The spool valve's high flow rate of **900 l/min.** as compared to its low volume is obtained due to the newly designed, small-sized multifunctional seal with oscillating effect.
The MEGA's excellent performance ratings allow for supplying pressure to **all types of cylinders**
- with barrels of **up to 80 mm** for standard applications, or
- with barrels of **125 mm** for speeds of 200 to 350 mm/sec.

RANGE OF MEGA SPOOL VALVES

- Air or solenoid air operated versions
- 2 x 3/2 NC, 5/2 and 5/3 versions (all of the same size)
- Monostable or bistable function

For characteristics and codes see page 5

2 x 3/2 NC monostable (**spring** return)

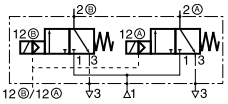

Type: **K**

5/2 monostable (spring return)

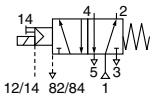

Type: **S**

5/2 monostable (differential return)

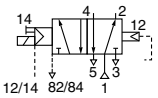

Type: **M**

5/2 bistable

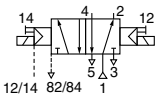

Type: **J**

5/3 centre closed (W1)

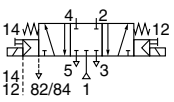

Type: **G**

5/3 centre open to pressure (W2)

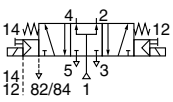

Type: **B**

5/3 centre open to exhaust (W3)

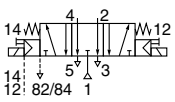

Type: **E**

00446GB-2008/R01
Availability, design and specifications are subject to change without notice. All rights reserved.

MODULAR DESIGN

MEGA spool valve islands: functional, modular units which are adapted to your needs and save time with quick and easy assembly without tools. The islands are delivered either pre-assembled, tested and ready for installation, or in individual components to be fitted together on-site.

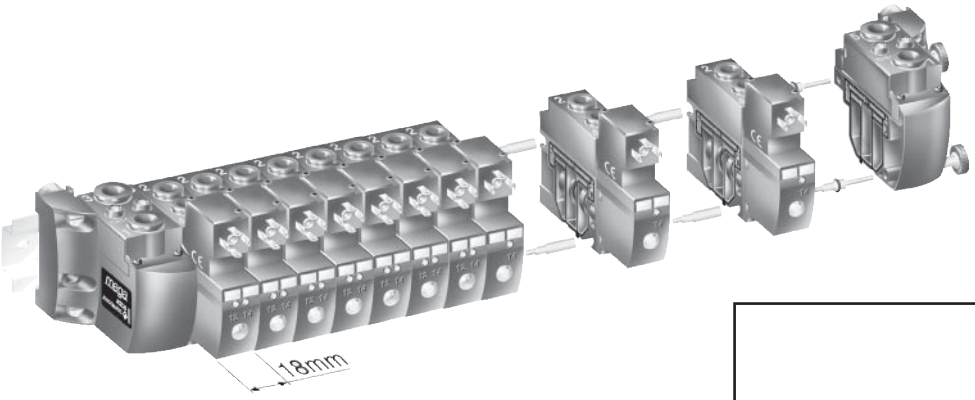

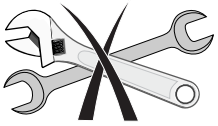

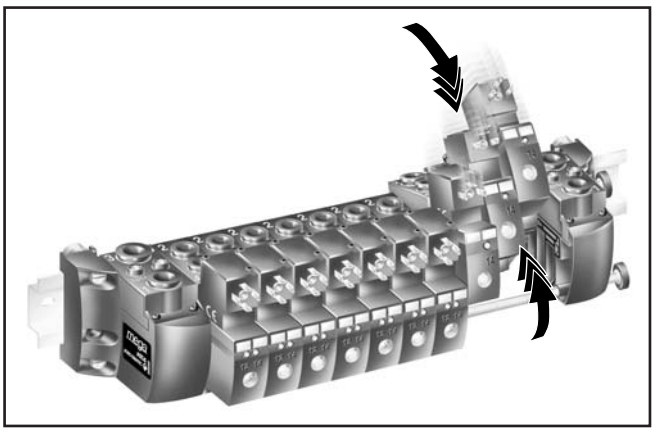

The product's design offers various possibilities to assemble MEGA islands:

- 16 spool valves at maximum (for more, consult us).
- Mixture of all types of spool valves and connection sizes (O.D. 6 mm and 8 mm).
- Internal or external pilot pressure supply.
- Accessory intermediate pressure modules to supply the island with more than one pressure level including vacuum.
- On-site extension due to easy assembly: every spool valve and accessory is supplied with 2 connecting bolts.

00446GB-2011/R01
Availability, design and specifications are subject to change without notice. All rights reserved.

JOINABLE SOLENOID AIR OPERATED MEGA SPOOL VALVES

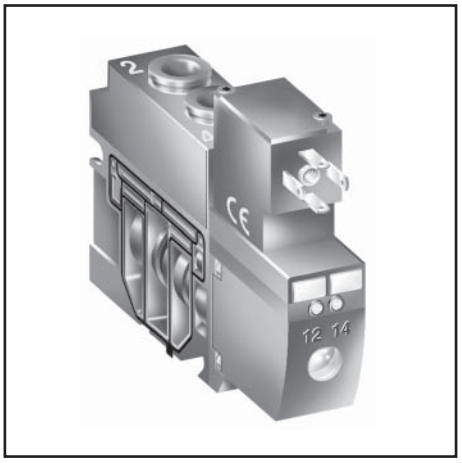

FEATURES

- **Space saving due to new patented design and integral twin pilot.**
- **High flow rate, reduced dimensions.**
- **Low power consumption.**
- **Quick installation and easy maintenance with visual indication of the spool position, identification and reference labels as well as manual override.**
- **Low weight for block installation.**

GENERAL

Fluid	Air or neutral gas, filtered at 30µm, lubricated or not
Operating pressure	-0.95 to 8 bar (with external supply) 3 to 8 bar (with internal supply)
Ambient temperature	-10°C to +50°C
Connection	
- Spool valve (ports 2 - 4)	instant fittings for flexible hose 6 or 8 mm O.D.
- End covers (ports 1 - 3 - 5)	G1/4 thread or instant fittings 10 mm O.D.
Flow (Qv at 6 bar)	see table below
Function	2x3/2 NC, monostable or bistable 5/2, 5/3
Pilot control	solenoid air operated with internal or external pressure supply
Pilot pressure	2 or 3 bar to 8 bar (see table below)
Vibration fatigue limit	to EN 60068-2-6 standard

CONSTRUCTION

Body and end covers glass-fibre reinforced synthetic material
Internal parts aluminium, stainless steel, zinc-plated steel, brass and synthetic material.
Seals NBR (nitrile) and PUR (polyurethane)
Manual operator Impulse-type or locking push/turn-type
Internal or external pilot pressure supply by selecting seal

Integral electrical pilot to NFC79300 (VDE 0580).
Encapsulated coil with flat terminals to DIN 46244 A 2.8 x 0.5 (spacing : 9.4 mm).
The bistable version is provided with an integral twin pilot placed on one side of the valve with a single electrical connector for reduced dimensions.

ELECTRICAL CHARACTERISTICS

voltage (*)	insulation class	protection degree	spool valve	consumption	electrical connection
24 V DC	F	IP 65	monostable	1.6 W	**2** flat terminals + earth
			bistable	1.5 W	**3** flat terminals + earth

(*) Monostable version, in alternative current, available

SPECIFICATIONS

type	function symbol		operators: pilot (14)	operators: return (12)	flow at 6 bar (l/min) (ANR)	pilot pressure (bar)	(M)	catalogue number (24 V DC) spool valve without connector ports 2-4 with instant fittings: 6mm O.D.	8mm O.D.
K	**2x3/2 NC**	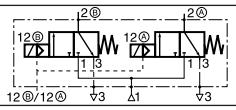	Solenoid air	Spring	450	4...8	▼	**57800041**	**57800013**
							●	**57800042**	**57800014**
S	**5/2**	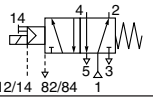	Solenoid air	Spring	900 (550)	3...8	▼	**57800030**	**57800002**
							●	**57800036**	**57800008**
M	**5/2**	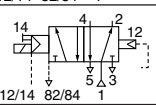	Solenoid air	Differential		3...8	▼	**57800031**	**57800003**
							●	**57800037**	**57800009**
J	**5/2**	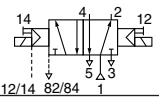	Solenoid air	Solenoid air		2...8	▼	**57800029**	**57800001**
							●	**57800035**	**57800007**
G	**5/3**	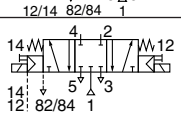	Centre closed **W1** solenoid air operated		600 (550)	3...8	▼	**57800032**	**57800004**
							●	**57800038**	**57800010**
B	**5/3**	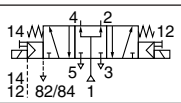	Centre open to pressure **W2** solenoid air operated		700 (550)	3...8	▼	**57800033**	**57800005**
							●	**57800039**	**57800011**
E	**5/3**	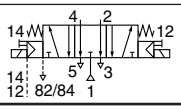	Centre open to exhaust **W3** solenoid air operated		750 (550)	3...8	▼	**57800034**	**57800006**
							●	**57800040**	**57800012**

(M) Manual override ▼ : impulse-type ● : locking, push/turn-type
(550) : Max. flow rate of 550l/min for the version with instant fittings for flexible hose O.D. 6mm.

ACCESSORIES FOR ISLAND ASSEMBLY see following pages

00446GB-2008/R01
Availability, design and specifications are subject to change without notice. All rights reserved.

END COVERS

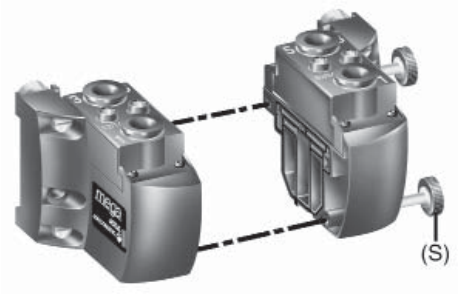

The end covers assure the following functions:
- **Island assembly**: the bolts are fixed into the covers. The island is tightened by hand with the knurled screws (S). There is no need for tools.
- **Choice of island mounting**:
  - on machine frame (2 Ø 4.2),
  - on DIN EN 50022 rail (for cabinet installation).
- **Pneumatic connection** of the channelled ports of the island (1 – 3/5 – 12/14 etc.)

■ Island assembly (see previous page)

■ Choice of island mounting

On machine frame

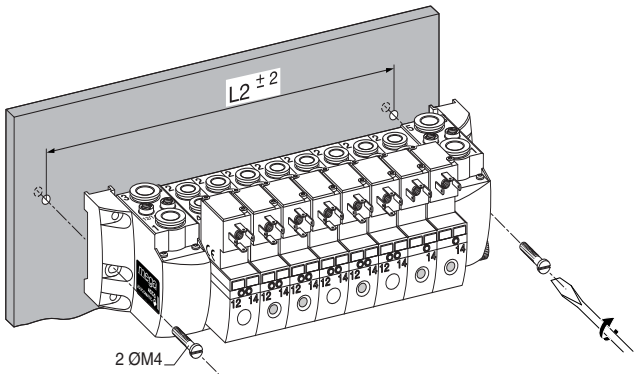

On DIN EN 50022 rail

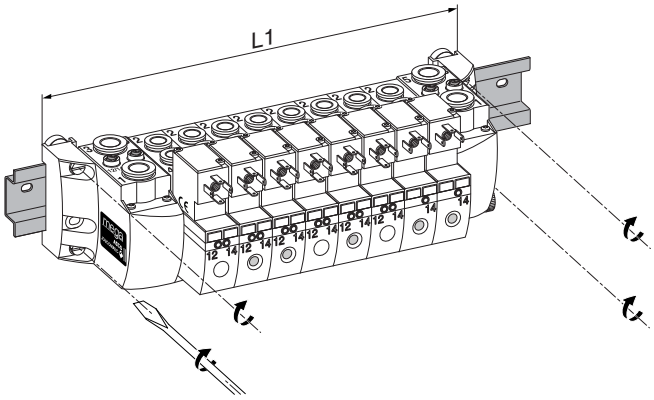

■ Pneumatic connection

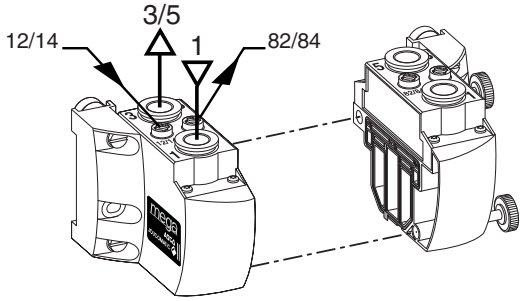

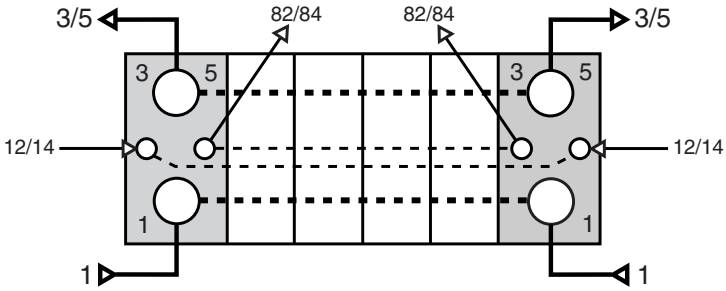

port nos.	connection size	
	Type: **Q**	Type: **G**
1	Instant fittings for flexible hose Ø 10mm O.D.	G1/4
3/5		
12/14	Instant fittings for flexible hose Ø 4mm O.D.	M5
82/84		

Port 1 :Pressure supply for island
Port 3/5 :Exhausts 3 and 5 channelled and connectable
Port 12/14 :**External** pilot pressure supply. Necessary for use with vacuum or if the general supply pressure is below 3 bar.
Port 82/84 :Channelling and connection of the pilot exhausts for installation of the island in protected environments (food-processing industries, laboratories etc.)

Possibility of direct connection of a silencer to each exhaust 3/5

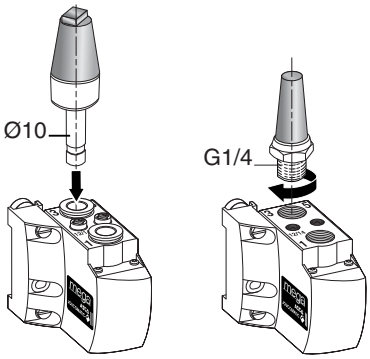

■ Order codes for end covers

description	port connections 1 - 3/5 (*)	type	catalogue number
1 set of 2 end covers for islands for **frame** mounting	Instant fittings for 10mm O.D. hose	**Q**	**88157901**
	G1/4 thread	**G**	**88157903**
1 set of 2 end covers for islands for **DIN rail** mounting	Instant fittings for 10mm O.D. hose	**Q**	**88157859**
	G1/4 thread	**G**	**88157861**

(*) For port connections 12/14 and 82/84 see above table

00446GB-2008/R01
Availability, design and specifications are subject to change without notice. All rights reserved.

SUPPLY WITH 1, 2 OR 3 DIFFERENT PRESSURES

A MEGA island is especially designed to be supplied with more than one pressure level.

■ Supply with 1 pressure (P1)

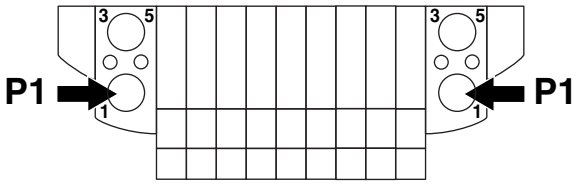

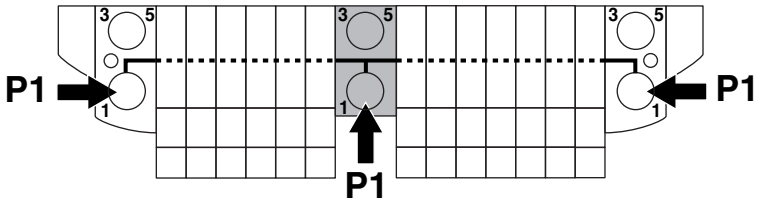

- All islands are provided with 2 end covers for choice of pressure supply side.
  For more than 8 spool valves or for simultaneous operation of 5 spool valves, the unit must be supplied with pressure from both sides.

- Units with more than 12 spool valves must be supplied with pressure from three sides using an intermediate pressure supply module which should be placed in the middle.

■ Supply with 2 different pressures (P1-P2)

A pressure separation plate must be used (see different types)

- Supply with 2 different pressures with **common** exhausts

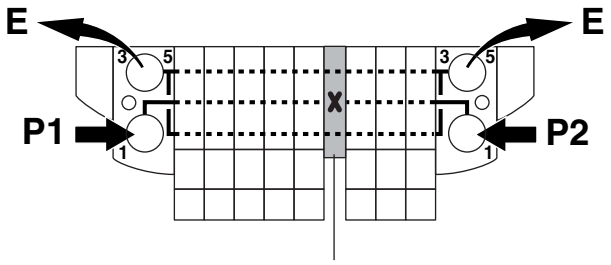

Pressure separation plate for blocking flow path 1 (type: **W**)

- Supply with 2 different pressures with **separate** exhausts

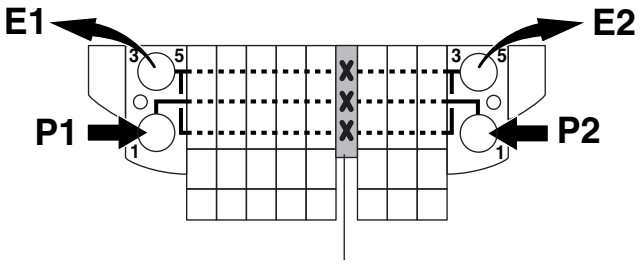

Pressure separation plate for blocking flow paths 1-3-5 (type: **X**)

■ Supply with 3 different pressures (P1-P2-P3)

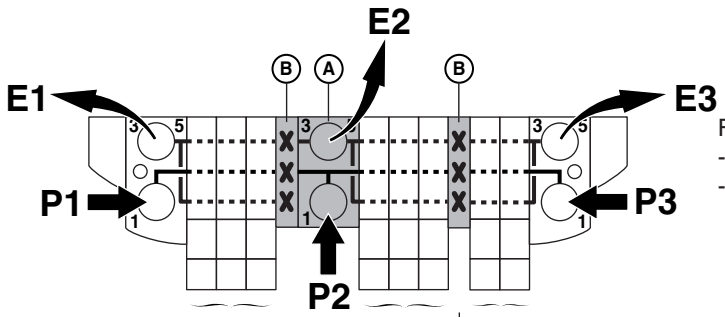

For this configuration use:
- 1 intermediate pressure supply module (A).
- 2 pressure separation plates (B). Choose between the following versions:
  - Ports 1 – 3 – 5 blocked to separate off the exhausts (type **X**).
  - Port 1 blocked to channel the exhaust of the whole island (type **W**).

00446GB-2011/R01
Availability, design and specifications are subject to change without notice. All rights reserved.

PRESSURE SEPARATION PLATE AND INTERMEDIATE PRESSURE SUPPLY MODULE

To obtain the configurations described on the opposite page, these accessories must be incorporated in the right order.

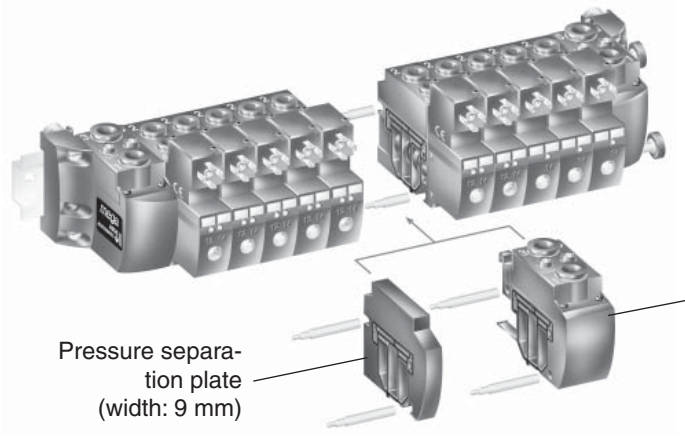

STANDARD VERSIONS FOR ISLANDS WITH CONNECTORS SIZE 15

description		type	catalogue number
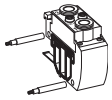 Intermediate pressure supply module	Ports 1 and 3 / 5 with instant fittings 10 mm O.D. (1)	**D**	**88157819**
	Ports 1 and 3 / 5 with G1/4 thread (1)	**D**	**88157821**
Pressure separation plate	Total blocking of ports 1 - 3 - 5 (no connection)	**X**	**88157815**
	Blocking of ports 3 - 5 (port 1 connection maintained)	**Y**	**88157817**
	Blocking of port 1 (ports 3 and 5 connections maintained)	**W**	**88157816**
	No blocking (ports 1, 3 and 5 connections maintained)	**V**	**88157818**
	Blocking of port 5 (ports 1 and 3 connection maintained)	**T**	**88157964**
	Blocking of port 3 (ports 1 and 5 connections maintained)	**R**	**88157965**

(1) An exhaust silencer can be mounted to port 3 / 5 (see following page)

Construction details of pressure separation plate

catalogue number	type	flow path				
		1	3	5	12/14	82/84
88157815	**X**	✶	✶	✶	✶	∇
88157817	**Y**	∇	✶	✶	∇	∇
88157816	**W**	✶	∇	∇	✶	∇
88157818	**V**	∇	∇	∇	∇	∇
88157964	**T**	∇	∇	✶	∇	∇
88157965	**Z**	∇	✶	∇	∇	∇

✶ : blocked ∇ : remains opened

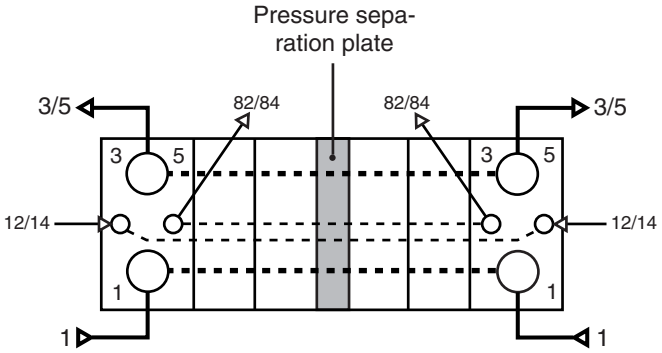

Port 1 : pressure supply
Port 3/5 : exhausts 3 and 5
Ports 12/14 : external pilot pressure supply
Ports 82/84 : connection of exhausts of pilot loop

00446GB-2008/R01
Availability, design and specifications are subject to change without notice. All rights reserved.

PRESSURE SUPPLY OF PILOT VALVES

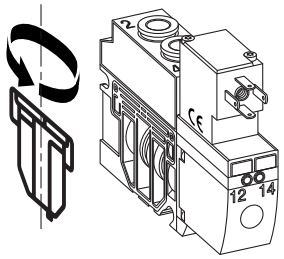

A MEGA spool valve is equipped on one side with a spacer sealing which also provides for a selecting function:

- The spool valve can be adapted to either internal or external pilot pressure supply simply by rotating this sealing.
- The position selected for each spool valve can be **identified from the outside** even after the spool valves have been assembled to islands.
- **Internal and external** pressure supply can be mixed on one island.
- If the components are supplied separately, the spool valves are delivered with the sealing placed in INT for internal pressure supply.

■ Internal pressure supply to pilot valves

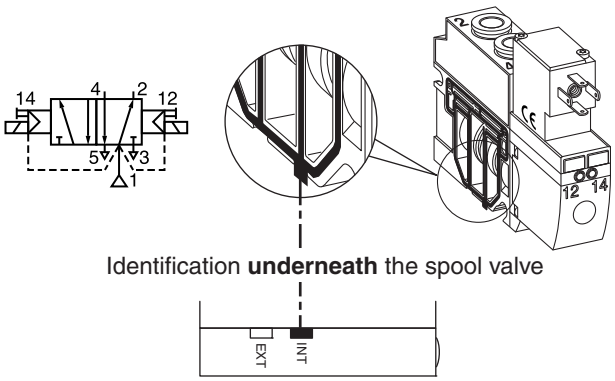

Identification **underneath** the spool valve

In this configuration:
The pilot valves are directly supplied with pressure by using the supply pressure (1) in the middle of the spool valve.
The common pressure supply (spool valve and pilot valves) is 3 to 8 bar (2 to 8 bar with bistable 5/2 spool valves).

■ External pressure supply to pilot valves

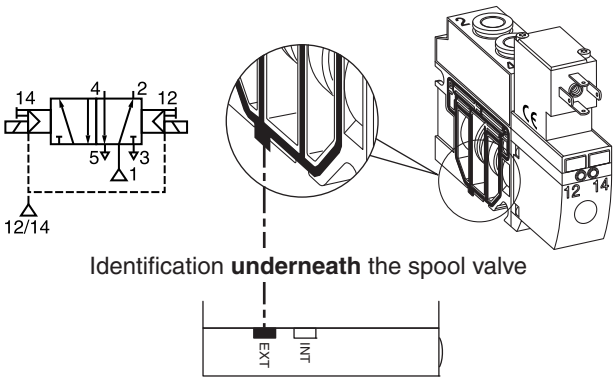

Identification **underneath** the spool valve

In this configuration:

- The spool valves on an island can be supplied with low pressure and vacuum.
- The pilots and the spool valves on an island can be supplied with pressure over 2 **separate** lines.

Supply pressure of pilot valves: 3 to 8 bar
(2 to 8 bar with bistable 5/2 spool valves)
Supply pressure of spool valves: -0.950 bar to +8 bar.
Connection of pilot pressure supply 12/14 at either one of the 2 end covers.

MOUNTING AND PNEUMATIC ACCESSORIES

accessory	description		catalogue number
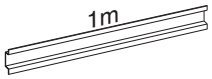	DIN EN50022 rail	1 m	**88157858**
		5 x 1 m	**33400033**
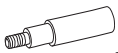 x10	Set of 10 connecting bolts 18 mm long (for 5 spool valves) (Note: Each spool valve is delivered with connecting bolts)		**88157893**
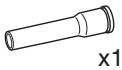 x10	Set of 10 instant reducing fittings 8 / 6 mm O.D. (1)		**88157887**
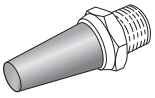	Exhaust silencer, male thread (2)	Plastic body	**34600407**
		Sintered bronze body	**34600002**
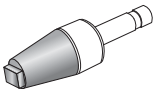	Sintered bronze exhaust silencer for direct mounting to ports with instant fittings 10 mm O.D. (3)		**88157826**
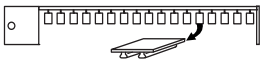	Set of 17 clip-on ID labels for spool valves and VCS connectors (Note: each component is supplied with 2 ID labels at delivery)		**88157851**

(1) For mounting to ports 2 – 4 of spool valves with 8 mm O.D. instant fittings for 6 mm O.D. flexible tube
(2) Exhaust silencer for ports 3/5 of G1/4 threaded end covers
(3) Exhaust silencer for ports 3/5 of end covers with instant fittings 10 mm O.D.

00446GB-2008/R01
Availability, design and specifications are subject to change without notice. All rights reserved.