Fan Bearing Housings

Series BL

With grease control discs
for ball bearings (without shaft)

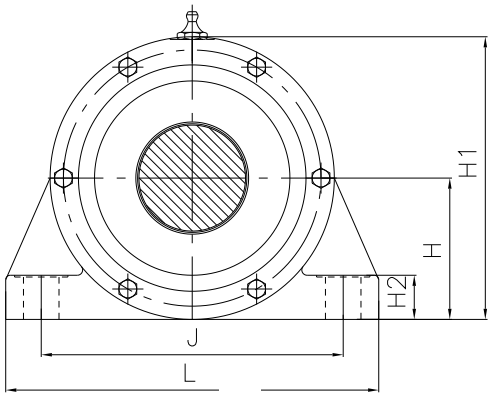

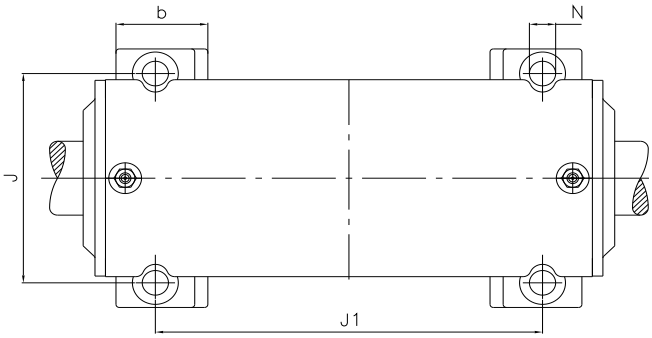

Housing Ref No	d_a	D	H	H_1	H_2	L mm	J	N	A	L_2	J_1	b
BL 25	25	62	50	95	16	155	120	11,5	218	184	135	41
BL 30	30	72	50	100	18	170	130	15	300	266	210	50
BL 35	35	80	60	120	20	190	150	15	330	296	240	50
BL 40	40	90	60	120	20	190	150	15	330	296	240	50
BL 40 S	40	90	60	120	20	190	150	15	450	416	360	50
BL 45	45	100	70	140	23	190	150	15	365	331	263	60
BL 45/K	45	100	70	140	28	200	160	16	260	226	165	64
BL 45/H	45	85	60	118	20	190	150	15	305	282	200	42
BL 50	50	110	70	140	23	190	150	15	365	331	263	60
BL 50 S	50	110	70	140	23	190	150	15	550	516	448	60
BLC 50	50	110	80	150	22	230	175	18	455	421	375	75
BL 55	55	120	80	160	25	210	170	20	405	371	295	70
BL 60	60	130	80	160	25	210	170	20	405	371	295	70
BL 60 SS	60	130	80	160	25	210	170	20	740	706	595	65
BLC 60	60	130	95	175	25	260	200	20	515	481	420	75
BLK 60	60	130	80	160	22	224	190	15	365	349	263	62
BL 70	70	150	95	190	28	270	210	24	450	416	330	80
BL 75	75	160	95	190	28	270	210	24	450	416	330	80
BL 80	80	170	112	217	30	290	230	24	490	450	350	75
BLK 80	80	170	105	210	30	300	250	20	395	375	295	70
BLL 80	80	170	120	240	35	335	280	24	590	566	450	88
BLK 90	90	190	120	240	35	355	280	24	440	416	330	78
BLL 90	90	190	120	240	35	335	280	24	590	566	450	88
BL 95	95	200	125	245	35	340	280	24	540	500	400	80
BL 100	100	215	145	290	40	400	335	24	590	562	450	104
BL 110	110	240	145	290	40	400	335	24	590	562	450	104

Fan Bearing Housings

Series BL

With grease control discs
for ball bearings (without shaft)

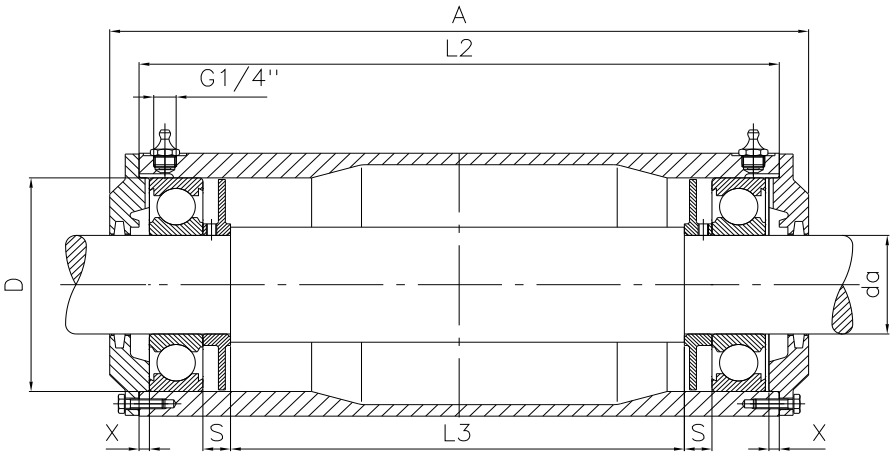

Shafts with key according to DIN 6885, page 1

Shaft ends with thread shape D according to DIN 332, page 2

Dimansion L_3 - does not leave space for the spring washer

Housing Ref No	Matching bearing	Weight kg	Compensating spring washer	Permissible speed rpm	Grease quantity (g) First fill	Grease quantity (g) Regreasing	s	x	L_3
BL 25	6305	6,5	AS 62	11000	50	-	14	7	108
BL 30	6306	8	AS 72	9000	60	5	14	7	186
BL 35	6307	9	AS 80	8500	80	5	16	7	208
BL 40	6308	10	AS 90	7500	110	10	16	7	204
BL 40 S	6308	16	AS 90	7500	110	10	16	7	324
BL 45	6309	14	AS 100	6700	140	10	16	7	235
BL 45/K	6309	12	AS 100	6700	140	10	16	7	130
BL 45/H	6209	14	AS 85	7500	120	10	8	15	198
BL 50	6310	13	AS 110	6300	190	10	16	7	231
BL 50 S	6310	21	AS 110	6300	190	10	16	7	416
BLC 50	6310	15	AS 110	6300	190	10	16	7	321
BL 55	6311	22	AS 120	5600	240	15	16	6	269
BL 60	6312	21	AS 130	5000	300	15	16	6	265
BL 60 SS	6312	35	AS 130	5000	300	15	16	6	600
BLC 60	6312	25	AS 130	5000	300	15	16	6	375
BLK 60	6312	21	AS 130	5000	300	15	16	12	231
BL 70	6314	31	AS 150	4500	480	20	20	6	294
BL 75	6315	32	AS 160	4300	590	20	20	6	290
BL 80	6316	50	AS 170	3800	700	20	20	6	320
BLK 80	6316	44	AS 170	3800	700	20	20	15	227
BLL 80	6316	75	AS 170	3800	700	20	20	16	416
BLK 90	6318	64	AS 190	3400	1000	25	20	16	258
BLL 90	6318	85	AS 190	3400	1000	25	20	16	408
BL 95	6319	60	AS 200	3200	1150	30	25	6	348
BL 100	6320	95	AS 215	3000	1450	35	25	16	386
BL 110	6322	86	AS 240	2600	1900	40	25	16	380

Fan Bearing Housings

Series BL ...

Completely assembled
with bearing and shaft

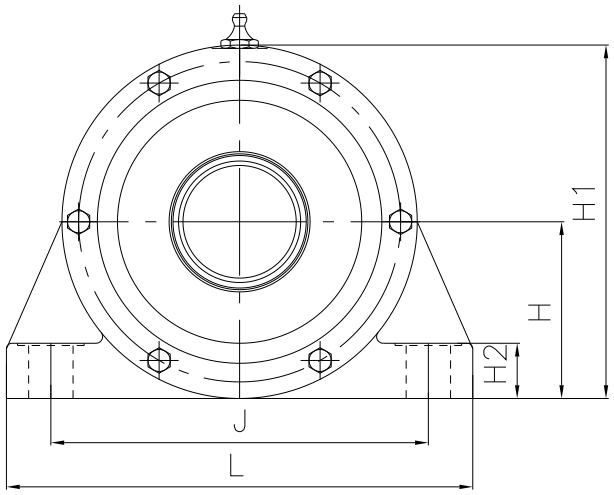

Housing Ref No	d_a	d	L_1	V	W	X	A	A_1	L_2	J_1	J	L	H	H_1	H_2	N
									mm							
BL 25	25	24	358	50	21	19	218	151	184	135	120	155	50	195	16	11,5
BL 30	30	28	470	50	50	20	300	231	266	210	130	170	50	100	18	15,0
BL 35	35	32	530	60	55	25	330	259	296	240	150	190	60	120	20	15,0
BL 40	40	38	530	60	55	25	330	257	296	240	150	190	60	120	20	15,0
BL 45	45	42	575	65	55	25	365	290	331	263	150	190	70	140	23	15,0
BL 50	50	48	585	70	55	25	365	288	331	263	150	190	70	140	23	15,0
BL 55	55	50	645	80	55	25	405	328	371	295	170	210	80	160	25	20,0
BL 60	60	55	645	80	55	25	405	326	371	295	170	210	80	160	25	20,0
BL 70	70	65	755	110	60	25	450	367	416	330	210	270	95	190	28	24,0
BL 75	75	70	755	110	60	25	450	365	416	330	210	270	95	190	28	24,0
BL 80	80	75	805	110	70	25	490	396	450	350	230	290	112	217	30	24,0
BLL 80	80	75	935	120	80	25	590	492	566	450	280	335	120	240	35	24,0
BLL 90	90	85	935	120	80	25	590	488	566	450	280	335	120	240	35	24,0
BLK 100	100	90	985	120/170	80	25	590	480	562	450	335	400	145	290	40	24,0
BLK 110	110	100	985	120/170	80	25	590	480	562	450	335	400	145	290	40	24,0

Fan Bearing Housings

Series BL ...
Completely assembled
with bearing and shaft

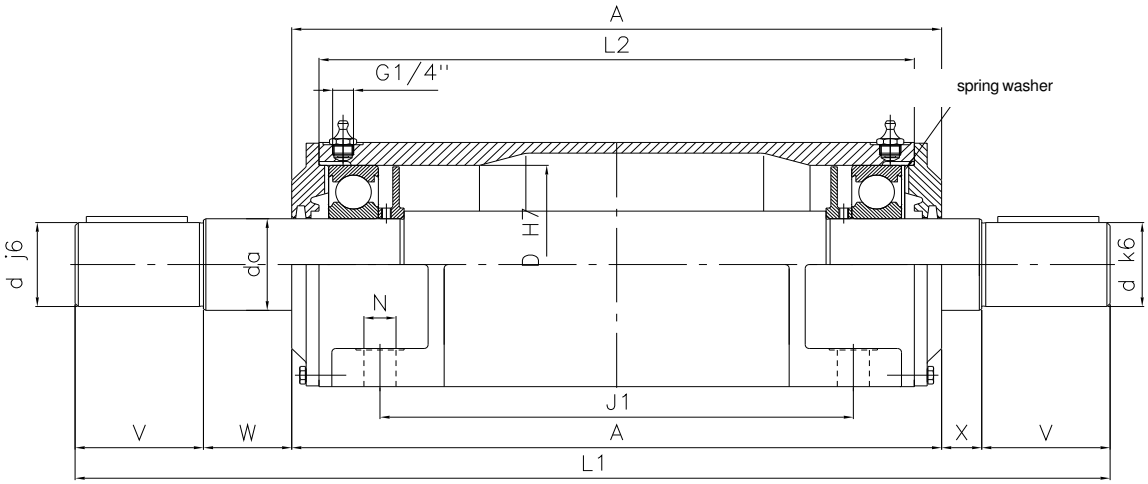

Shafts with key according to DIN 6885, page 1

Shaft ends with thread shape D according to DIN 332, page 2

Fitted Bearing	D	Compensating Spring washer	Grease quantity (g) per bearing for regreasing	Speed rpm	Weight kg
6305 C3	62	AS 62	5	11000	9
6306 C3	72	AS 72	5	9500	12
6307 C3	80	AS 80	5	8500	17
6308 C3	90	AS 90	10	7500	18
6309 C3	100	AS 100	10	6700	28
6310 C3	110	AS 110	15	5300	37
6311 C3	120	AS 120	15	5300	37
6312 C3	130	AS 130	15	5000	39
6314 C3	150	AS 150	20	4300	63
6315 C3	160	AS 160	20	4000	64
6316 C3	170	AS 170	20	3800	84
6316 C3	170	AS 170	20	3400	132
6318 C3	190	AS 190	25	3400	134
6320 C3	215	AS 215	35	3000	198
6322 C3	240	AS 240	40	2600	196